DX JIGs
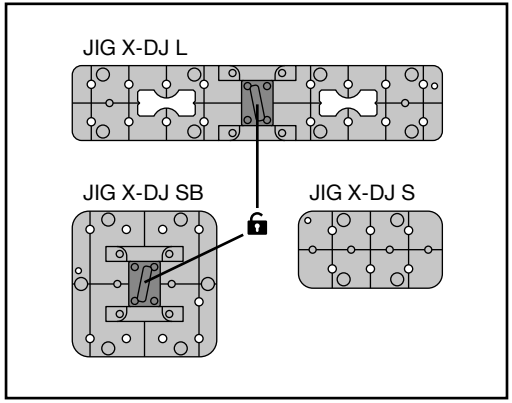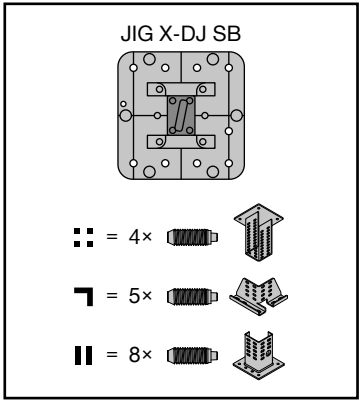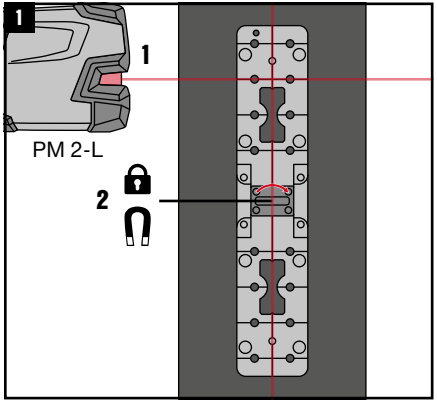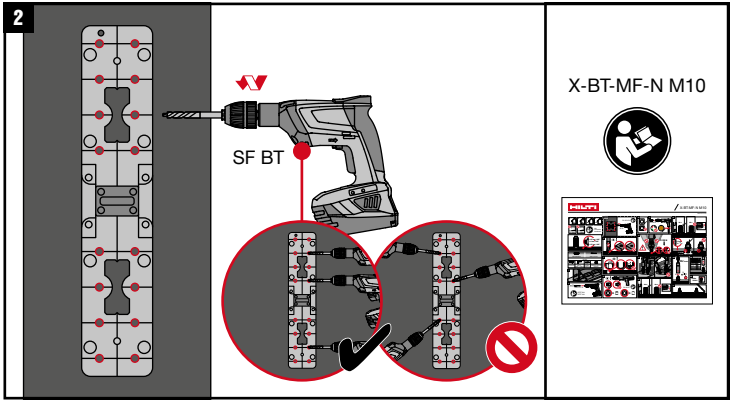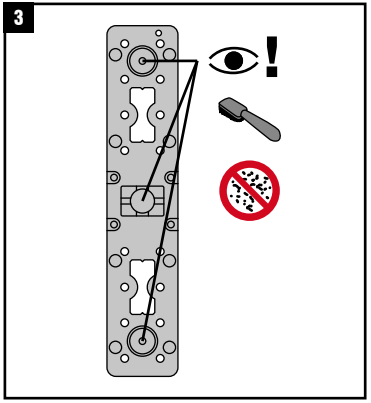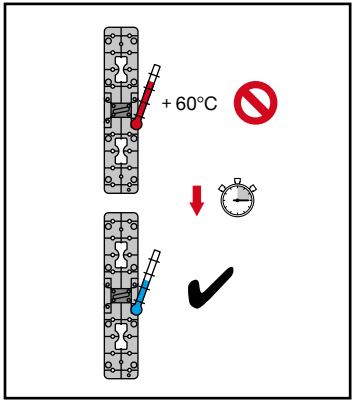
2281105 A1-08.2020